AGENDA
COMMUNITY REDEVELOPMENT AGENCY
REGULAR MEETING
TUESDAY, DECEMBER 10, 2024 - 5:30 PM

ANY PERSON WHO DECIDES TO APPEAL ANY DECISION MADE WITH REGARD TO ANY MATTER CONSIDERED AT THIS MEETING OR HEARING WILL NEED A RECORD OF THE PROCEEDING, AND FOR SUCH PURPOSE MAY NEED TO ENSURE THAT A VERBATIM RECORD OF THE PROCEEDING IS MADE WHICH RECORD INCLUDES THE TESTIMONY AND EVIDENCE UPON WHICH THE APPEAL IS TO BE BASED.

LOBBYIST REGISTRATION IS REQUIRED. PRIOR TO ENGAGING IN ANY LOBBYING ACTIVITIES, WHETHER OR NOT COMPENSATION IS PAID OR RECEIVED IN CONNECTION WITH THOSE ACTIVITIES, EACH LOBBYIST SHALL FILE WITH THE CITY CLERK AN ANNUAL REGISTRATION STATEMENT AND PAY AN ANNUAL TWO HUNDRED FIFTY DOLLARS ($250.00) REGISTRATION FEE FOR EACH PRINCIPAL OR EMPLOYER. REGISTRATION FORMS ARE AVAILABLE ON THE CITY WEBSITE: WWW.DANIABEACHFL.GOV. (ORDINANCE #2012-019; AMENDED BY ORDINANCE #2019-019)

IN ACCORDANCE WITH THE AMERICANS WITH DISABILITIES ACT, PERSONS NEEDING ASSISTANCE TO PARTICIPATE IN ANY OF THESE PROCEEDINGS SHOULD CONTACT THE CITY CLERK'S OFFICE, 100 W. DANIA BEACH BOULEVARD, DANIA BEACH, FL 33004, (954) 924-6800 EXTENSION 3624, AT LEAST 48 HOURS PRIOR TO THE MEETING.

IN CONSIDERATION OF OTHERS, WE ASK THAT YOU:

A. PLEASE TURN CELL PHONES OFF, OR PLACE ON VIBRATE. IF YOU MUST MAKE A CALL, PLEASE STEP OUT INTO THE ATRIUM, IN ORDER NOT TO INTERRUPT THE MEETING.
B. IF YOU MUST SPEAK TO SOMEONE IN THE AUDIENCE, PLEASE SPEAK SOFTLY OR GO OUT INTO THE ATRIUM, IN ORDER NOT TO INTERRUPT THE MEETING.

DECORUM POLICY FOR MEETINGS OF THE BOARD OF DIRECTORS OF THE DANIA BEACH COMMUNITY REDEVELOPMENT AGENCY OF THE CITY OF DANIA BEACH, FLORIDA:

INDIVIDUALS WHO WISH TO MAKE ANY "CITIZEN'S COMMENTS" UNDER THAT PORTION OF THE CRA BOARD AGENDA, OR WHO OTHERWISE WANT TO ADDRESS THE CRA BOARD, MUST FIRST BE REGISTERED WITH THE CRA SECRETARY (CLERK) (FORMS ARE AVAILABLE OUTSIDE OF THE CITY COMMISSION CHAMBER AND MUST BE GIVEN TO THE CLERK BEFORE THE MEETING). OTHERS WHO WANT TO ADDRESS THE CRA BOARD ON ANY MATTERS MUST FIRST BE RECOGNIZED BY THE CHAIR. ALL SUCH PERSONS MUST USE THE PODIUM IN THE COMMISSION CHAMBER. NO MORE THAN ONE PERSON AT A TIME MAY ADDRESS THE CRA BOARD FROM THE PODIUM. COMMENTS ARE ONLY TO BE MADE TO THE CRA BOARD AND ARE NOT TO BE DIRECTED TO THE AUDIENCE OR CRA STAFF.

NO INDIVIDUAL SHALL MAKE ANY SLANDEROUS OR UNDULY REPETITIVE REMARKS, OR ENGAGE IN ANY OTHER FORM OF BEHAVIOR THAT DISRUPTS OR IMPEDES THE ORDERLY CONDUCT OF THE MEETING, AS DETERMINED BY THE CHAIR. NO INDIVIDUAL MAY SPEAK DIRECTLY TO OR ADDRESS THE CHAIR, BOARD MEMBER OR CRA STAFF: COMMENTS ARE TO BE ONLY DIRECTED TO THE CRA BOARD AS A WHOLE. NO CLAPPING, APPLAUDING, HECKLING OR VERBAL OUTBURSTS IN SUPPORT OF OR OPPOSITION TO A SPEAKER OR HIS OR HER REMARKS SHALL BE PERMITTED. NO SIGNS OR PLACARDS SHALL BE PERMITTED IN THE COMMISSION CHAMBER.

IF ANY PERSON'S CONDUCT AS DETERMINED BY THE CHAIR IS FOUND TO BE DISRUPTIVE OR INTERFERES WITH THE ORDERLY CONDUCT OF THE MEETING, THE PERSON MAY BE ASKED BY THE CHAIR TO LEAVE THE COMMISSION CHAMBER; IF THE PERSON DOES NOT LEAVE AND THE CONDUCT PERSISTS, THE CITY POLICE DEPARTMENT WILL BE REQUESTED TO ESCORT THE INDIVIDUAL FROM THE COMMISSION CHAMBER.

ALL CELLULAR TELEPHONES ARE TO BE SILENCED DURING THE MEETING. ALL PERSONS EXITING THE COMMISSION CHAMBER SHALL DO SO QUIETLY. (RESOLUTION #2020-CRA-006)

1. CALL TO ORDER/ROLL CALL

2. CITIZENS' COMMENTS

Addressing the Commission: A thirty (30) minute "Citizen Comments" period shall be designated on the agenda for citizens and interested persons to speak on matters whether or not scheduled on that day's agenda. Individuals wishing to speak on a matter not included on the "Public Hearing" section of the agenda, which matter pertains to an item before the City Commission which requires a decision of the City Commission, may do so by signing in and submitting a form to that effect with the City Clerk prior to the meeting. Speakers at Public

Hearings shall also submit such a form. Each speaker shall be limited to 3 minutes for his or her comments. If more than ten (10) speakers express a desire to speak, the Commission shall determine on a meeting by meeting basis whether to (a) extend the time allotted for citizen comments to accommodate all speakers, or (b) whether to limit the number of speakers or amount of time per speaker. A speaker's time shall not be transferable to another speaker.

3. ADMINISTRATIVE REPORTS

1. Admin Report

4. PRESENTATIONS: None

5. CONSENT AGENDA

1. Minutes: October 7, 2024 CRA Board Meeting Minutes
2. Travel Requests: None.

6. PROPOSALS AND BIDS: None

7. DISCUSSION AND POSSIBLE ACTION

1. Commercial Façade Grant Application: 24 NE 1 Ave
2. Potential Disposition of a CRA-Owned Land Parcel - 137 NW 4th Ave
3. Approval of 2025 CRA Board Meeting Dates

8. INFORMATION ITEMS: None

9. BOARD MEMBER COMMENTS

10. ADJOURNMENT

City of Dania Beach
Memorandum

DATE: 12/10/2024

TO: Chair and Board Members

FROM: Michael Chen, Executive Director

SUBJECT: Administrative Report

---

1. DANIA BEACH INNOVATION ECOSYSTEM

Background: An Innovation Ecosystem has different platforms to support entrepreneurs and early-stage ventures. The Dania Beach Innovation Ecosystem includes:

- Education
- Location & Events
- Mentorship
- Incubation & Acceleration
- Funding
- Talent

Updates:

In collaboration with SCORE Broward, the Dania Beach Business Academy is providing a 4-week program titled, Financial Strategies for Small Businesses. The series will be online on Mondays, 6:00 – 7:30pm, via ZOOM (flyer attached). As of this memo, over 80 people have registered for this program.

- Nov. 4: Financial Planning for Small Businesses
- Nov. 11: How to Win with Small Business Marketing Planning
- Nov. 18: Building Personal and Business Credit
- Nov. 25: Sourcing Capital for your Business

SCORE Broward provided a tracking analysis of Dania Beach businesses/residents who participated in SCORE programs during FY2024. From October 2023 to February 2024, the Dania Beach Business Academy held two course program – Revenue Generation and First Time Homebuyer. During the eight (8) sessions of those two classes, 902 people attended – Revenue

Generation 525, First Time Homebuyer 377.
From January 2024 through September 2024, 300 people from Dania Beach attended SCORE programs. Thirty-five (35) residents/businesses also scheduled face-to-face mentoring sessions with SCORE.

2. ECONOMIC DEVELOPMENT

CRA Business Manager: Krystal Permanan joined the CRA on October 23rd. She is a graduate of the prestigious Oklahoma University – Economic Development Institute. Most recently, Krystal was the Business Assistance Administrator, a manager level position for the Ft Lauderdale Executive Airport (FXE), where she was the administrator Foreign Trade Zone #241 (countywide authority) and the leasing manager for the 1,000-acre FXE campus and 200-acre Industrial Airpark, including 2,000,000sf of office/warehouse space.

3. SPIRIT AIRLINES QTI/HIPI INCENTIVE

Background: On September 10, 2019, the CRA Board approved Resolution No, 2019-CRA-020 committing to pay the ten (10%) percent Local Financial Support (LFS) required by the State QTI and HIPI programs as an incentive to Spirit Airlines to relocate a new headquarters and operations facility to the Redevelopment Area at the Dania Pointe. The Spirit Airlines headquarters project qualified for both the QTI program (150% average wage $4,000/job) and the HIPI bonus program ($2,000/job). The project location qualified for a Brownfield bonus incentive ($2,000/job, State only). The CRA's LFS commitment represents a total of $135,000, payable for FY2023 to FY2030. Broward County also has a ten (10%) percent LFS.According to the Greater Ft Lauderdale Alliance analysis (IMPLAN PRO), the Spirit Airlines project is forecasted to have the following impacts:

- **Capital Investment:** Approximately $173,420,000 over three years for property purchase, development, and construction (2019 $).
- **Job Creation:** 225 new hires over 5 years, with an average salary of $78,854 (direct 225, indirect 132, induced 135 = 492 total jobs), and 853 retained jobs.
- **Job Creation Output Impact**: $87,988,239 over five years from Direct, Indirect, and Induced Jobs (2019 $).
- **Estimated Taxable Value (City)**: $208,750,000.
  Update: On October 24, 2024, Florida Commerce Division of Economic Development notified Spirit Airlines that based on their 2023 funding application, independent research, and supporting documents, Spirit was approved for their full QTI/HIPI ($112,500 – State, County, CRA) and Brownfield Bonus ($37,500 – State only) incentives for FY2024/25. The approved funding will be released upon receipt of the Broward County and Dania Beach LFS payments. Based on their analysis, in 2023 Spirit Airlines actual achievements include:
    - New Jobs: Required Jobs 75 / Actual Jobs 214
    - Wages: Required average $78,854 / Actual Average $109,569

On October 28,2024, the Florida Commerce Division of Economic Development submitted an invoice to the CRA for our ten (10%) percent of the LFS, in the amount of $11,250. The required local funding match of $11,250 has been processed for payment.
Attachments: Florida Commerce funding approval notice to Spirit Airlines
Florida Commerce LFS Invoice to the Dania Beach CRA
Resolution No, 2019-CRA-020
Greater Ft Lauderdale Alliance QTI Payout Schedule (Attached to Reso)

4. CRA WESITE UPDATE

The update of the CRA website (www.daniabeachcra.org) with VUP Media is complete and is in a draft form going live by mid-day, Tuesday (Nov. 19). At your convenience, please browse through the updated website (https://www.daniabeachcra.org/) and let me know about any comments/observations you may have. Plan to have a brief discussion about the new website at our January CRA Meeting.

5. PATCH

Fruitful Fields programs at the PATCH:

- **PATCH Publicity:** The Fruitful Field was interviewed by Edible South Florida for an article featuring the PATCH – a copy of the Edible South Florida Fall 2024 publication with the article is at your seats on the dais.

- Edible South Florida explores local foods, stories, and communities by season. As the trusted voice of the local food movement, they inspire readers to support and celebrate the growers, producers, chefs, restaurants, food and drink artisans, and other culinary businesses in the community. Edible South Florida reaches followers in Broward, Miami-Dade and Monroe counties.

- **Holidays Around The World**: Dania Beach PATCH, Love Our Nation, & The Fruitful Field Celebrate Christmas, Hanukkah and Kwanza with Arts and Crafts on December 14, 10:00AM-11:30AM. This is a chance to pick up unique holiday gifts:
    1. Herb wreaths
    2. Bath Salts with fresh garden herbs (lavender/basil/rosemary)
    3. Pinecone bird feeders
    4. And more….

If there is a holiday celebration that you'd like to share, please contact us: Info@thepatchgarden.com.

- **Veterans Appreciation Ceremony:** On November 9th, 9:00am – 12:00pm, the PATCH, the Fruitful Fields (TFF), and Love Our Nation (LON) hosted an appreciation ceremony for Dania Beach Veterans (see attached flyer).

Activities at the event included:

- Sidewalk Chalk Art fun
- Patriotic Sing-along
- Love Our Nation youth presentation honoring local Veterans
- Gifting of plants to Veterans
- Cider and donuts refreshments

- **Feeding Florida**: Feeding Florida is distributing and explaining to residents the Fresh Access Bucks program (50% off for EBT cardholders) that include the Dania Beach PATCH address.
- **CW Thomas Park**: After-school program started September 11. Parks will bring kids to the PATCH after school on Wednesdays until December.
- **Plant Sale**: On Saturday, November 23, TFF hosted a Plant Sale from 9:00 – 12:00 (see attached flyer). The primary purpose was to engage the local neighborhood
- **Fresh Food Box: December 2 - April 14, the PATCH will again sell weekly seasonal food boxes. Pick-up will be Tuesday afternoons (4:00-6:00) or Wednesday mornings (10:30-11:30). The cost will be $20.00 per box, EBT/SNAP cardholders receive 50%**

off. Dania Beach residents are given priority for distribution.

- **Adult Intern Program:** TFF is hosting an Adult Intern Program available at the three community gardens they manage, including the PATCH. The program is for 9 hours per week, September through April. The program provides participants with gardening skills, fresh veggies which they grow, and a social environment. This program will start in September and eight (8) people have registered for the PATCH. The program was advertised in the Dania Beach Press, September edition, on social media, and posted on the CRA website. (Flyer attached)
- **Veterans, Youth and Special Need Agriculturists Assistance Program**: The Farmers Outreach program is primarily focused on assisting veterans, small farmers, minorities, and the socially disadvantaged by offering a hands-on farming experience through apprenticeships, agricultural workshops, and technical one-on-one advice on USDA loans/grant programs.
- FIU has approved the PATCH as their Broward location for the Intern program and has discussed Bianca (PATCH Lead Coordinator) and Jaime (TFF Executive Director) to conduct workshops for FIU. FIU is extending the USDA grant program the support the Adult Intern Program described above.
- **Farmer's Market:** On Saturday, November 23, TFF hosted a Farmer's Market with locally grown produce and Thanksgiving crafts (see attached flyer).
- **Memorial Healthcare**: TFF is working with Memorial Healthcare to conduct Lifestyle Workshop series at the PATCH.
- **Home-Based Businesses:** On Saturday, January 11, 2025, TFF is hosting a home-based business day. The theme of the day is how to start a home-based business, with business tips, and provide an opportunity for new businesses to introduce their products.

Love Our Nation programs at the PATCH:
Love Our Nation is now publishing a monthly activities calendar. A copy of their November 2024 calendar is attached. Programs scheduled for the PATCH are color-coded in GREEN.

- **Love Our Nation Success Luncheon:** December 22, 12:30PM-3:00PM, at the Dania Beach Patch. Attire, nice casual (no jeans or sneakers). The Dania Beach Community is invited to share in the success of our Love Our Nation Youth. A complementary 3 course meal will be served. Please RSVP before Dec. 15, 2024: 305 756 0550 or email Info@loveournation.org
- **Earth 2 Table:** Earth 2 Table programs are held every Monday, 2:30 to 5:30, except for school holidays. The program teaches youth the importance of making healthy food choices and caring for the environment. Programs include gardening, journaling, etiquette, teamwork, communication skills, finance, homework, and public speaking.
- **Financial Literacy**: On November 20,2024 Love Our Nation took their monthly field trip to Sun Credit Union where all of the children have a savings account. LON encourages children to save the money they earn from their families or "Love Bucks" (money that is earned at Love Our Nation by doing something extra ordinary).

The Youth had a complete banking experience.

- Completing the deposit slip, waiting in line until it is their turn to go to the teller.
- Speaking with the teller, giving the teller their funds, waiting until the transaction is complete, and then verifying their deposit slip.
- The children had their monthly Financial Literacy lesson via Zoom with Makani Kone a Synovus Bank Account Manager (former Love Our Nation participant) 1 week prior to the trip.

- **Senior Fresh Fruit and Veggie Bicycle Distribution:** The Love Our Nation Youth will begin to call neighborhood Seniors and get their addresses and explain what the SFF&VBD is and ask them if they'd like to participate. In their groups they will map the Seniors addresses and begin planning for the December event. LON will also begin planting lettuce in our Hydroponic system which will be served at the Love Our Nation End of the Year Luncheon.
- **Raised Bed Construction**: Construction of the 64 new raised beds has been challenging. Compressing a 3-year project into 4 months is not just building faster. We also had to deal with finding vendors, complying with purchasing policies, arranging deliveries, and the weather. A long stretch of abnormal heat warnings shortened the afternoon workday and several days of heavy rain wiped out the entire day. We also expanded the scope of work by adding a complete rebuild of the irrigation system and building a second nursery. In spite of the challenges, all of the 64 new raised beds are complete, and irrigation system is complete. Seedlings have been started in the nurseries and will be transplanted to the raised beds in the next few weeks.
- Crops being planted in the new beds include: Arugula, Kale, Basil, Tomatoes, Cilantro, Oregano (Italian & Cuban), Cabbage Savoy, Mizuna, Tokyo Bekana, Cauliflower, Mizuna, Italian Parsley, Premium Greens, Collards, Komatsuna (Japanese Mustard Spinach), Hon Tsai Tai (Asian Green Leaves), Eggplant, Swiss Chard, Carrots, Pac Choi (Chinese Cabbage), Beans, Radish, and Mustards. Collards, Basil, Oregano, Mixed Salad Greens, and Lemongrass. Cabbage, Beans, and Tomatoes could be ready for sale by the "second week of December.
- The Fruit Tree Planting Foundation (FTPF) is an award-winning international nonprofit charity dedicated to planting fruitful trees and plants to alleviate world hunger, combat global warming, strengthen communities, and improve the surrounding air, soil, and water. FTPF has provided a grant to TFF for 100 fruit trees at a TFF farm. Some of those trees will come to the PATCH and the planting will take place on December 14th. One to two fruit trees is planned for each raised bed. This will expand the PATCH growing season as fruit trees tend to do well during the summer.

The success of this project is a direct result of the efforts of Bianca Bacarossi, our Lead Farm Coordinator, Jamie Castoro, Fruitful Field Executive Director, Noah Siegel, Fruitful Field Farm Manager, with the administrative support of Denise Greenstein, CRA Executive Assistant.During the month of November, the PATCH had 32 volunteers. (Recent photos included.)

Financial Strategies for Small Business

A program sponsored by the Dania Beach CRA

EVERY MONDAY NIGHT IN NOVEMBER FROM 6PM - 7:30PM ONLINE

FREE ONLINE "ZOOM" SMALL BUSINESS COURSES!

NOV 04 | Financial Planning for Small Businesses | Natasha Britton
https://www.score.org/broward/event/financial-planning-small-businesses

NOV 11 | How to Win with Small Business Marketing Planning | Mari Naranjo
https://www.score.org/broward/event/how-win-small-business-marketing-planning

NOV 18 | Building Personal and Business Credit | Anthony Iacobucci
https://www.score.org/broward/event/building-personal-and-business-credit

NOV 25 | Sourcing Capital for Your Business | Ron Krudo
https://www.score.org/broward/event/sourcing-capital-your-business-9

FOR MORE INFORMATION: (954) 924-6801
cra@daniabeachfl.gov | DaniaBeachCRA.org
WHEN YOU REGISTER FOR 1 CLASS, YOU ARE REGISTERED FOR ALL 4.

REGISTER ONLINE TODAY!

MEET YOUR SMALL BUSINESS EXPERTS

Natasha Britton

President and CEO | NB Services, LLC

Natasha has been practicing accounting for 10+ years for in healthcare, consumer goods, food & beverage, and real estate companies. She is a proud graduate of Florida A&M University, with a bachelor's in accounting and master's in business administration. Natasha created NB Services with the intention of helping small businesses owners understand and grow their businesses. She specializes in Accounting, Bookkeeping, Business Start-Up Consulting, Tax preparation, and Financial Literacy. The majority of her services are offered virtually in order to extend her impact to a wider range of clients.

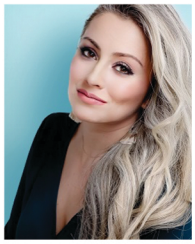

Mari Naranjo

Chief Dream Officer | DreamCatcher Marketing

Mari is a branding coach and marketing consultant with 20+ years of experience across creative agencies, non-profits, and Fortune 500s, including YUM! Brands (one of the most successful franchises in the world), Cisneros Fontanals Art Foundation, Hispanic Unity of Florida, and her creative marketing agency DreamCatcher. With a degree in Communications Arts from St. Thomas University and 10+ years as an entrepreneur, helps her take a fresh vision at the challenges and solutions faced by solopreneurs. She enjoys igniting fresh ideas, inspiring success, and motivating new founders. Her attention to detail is her most appreciated quality.

Anthony Iacobucci

National Director | Uqual

Anthony is the National Director at UQUAL, bringing over 14 years of expertise in mortgage credit education and FICO scoring. As a certified FICO expert, Anthony has a deep understanding of credit systems and has helped countless individuals improve their credit health. In addition to his credit knowledge, Anthony is also an experienced sales trainer and pipeline manager, dedicated to developing high-performance teams and driving success within the organization.

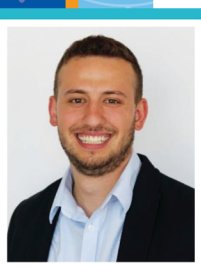

Ron Krudo

Managing Partner | Equiturn Business Solutions

Ron is the Co-Founder and Managing Partner at Equiturn Business Solutions, a small business management consulting firm. With a master's in management and public administration from Florida State University, Ron has spent a decade supporting small businesses, non-profits, and consultants. He has provided extensive training and experience in professional development to over 20,000 people. Ron also spent the past 5 years working for StandWithUs, managing an international team of over 100 and raising over $20 million in working capital through his expertise in sales, event management, and marketing

SCORE
FOR THE LIFE OF YOUR BUSINESS

DANIA BEACH
COMMUNITY REDEVELOPMENT AGENCY

FLORIDACOMMERCE

Ron DeSantis GOVERNOR
J. Alex Kelly SECRETARY

October 24, 2024

Chip Sandifer
Senior Director, Commercial Real Estate
Spirit Airlines, Inc.
2800 Executive Way
Miramar, Florida 33025

RE: QTI-Brownfield Redevelopment (§288.106, F.S.) (QTI with Brownfield Bonus) Tax Refund Claim FY2024-2025 / Agreement #: SB20-030 / Project#: 19-12384

Dear Mr. Sandifer:

The Florida Department of Commerce's Division of Economic Development is pleased to inform Spirit Airlines, Inc. ("Company") that its State Fiscal Year 2024-2025 QTI with Brownfield Bonus tax refund claim has been approved for a refund in the amount of $150,000. The Division of Economic Development's decision was based on a review of the company's calendar year 2023 tax refund application and included independent research and analysis of supporting documentation provided to confirm the required number of jobs, wages paid, and eligible taxes paid.

The approved refund of $150,000 ($112,500.00 for QTI / $37,500.00 for Brownfield Bonus) includes the required 20 percent local support to be provided by Broward County and the City of Dania Beach. The Division of Economic Development has requested the required Local Financial Support. Once received, the Division of Economic Development will process the Company's approved refund for payment.

We wish the Company continued success with this QTI with Brownfield Bonus project. Should you have questions about your tax refund claim, please contact Nick Beske, the Division of Economic Development's Contracts & Grants Manager, by phone at 850.717.8975 or by email at Nick.Beske@commerce.fl.gov.

Sincerely,

Jason Mahon
Deputy Secretary, Division of Economic Development

cc:

K. Michael Chen, Dania Beach

Maribel Feliciano, Broward County

An equal opportunity employer/program. Auxiliary aids and service are available upon request to individuals with disabilities. All voice telephone numbers on this document may be reached by persons using TTY/TTD equipment via the Florida Relay Service at 711.

Local Financial Support

INVOICE

Date: October 28, 2024 Contract # SB20-030 Fiscal Year: 2024-2025

Incentive: QTI-Brownfield Redevelopment(§288.106, F.S.)
Business Unit: Spirit Airlines, Inc.
Project Number: 19-12384

Local Govt.: Dania Beach Resolution Number: 2019-128

TO:
K. Michael Chen
100 W. Dania Beach Boulevard
Dania Beach Florida 33004
FEID: 59-6000302

SUBJECT: Local Financial Support

Please attach your check in the amount of the total remittance for QTI-Brownfield Redevelopment(§288.106, F.S.)'s Local Financial Support.

QTI Amount to be Remitted: $11,250 BROWN Amount to be Remitted: N/A

Total to be Remitted: $11,250

Please make payable to: State of Florida – FloridaCommerce and mail it and this invoice to the following address:

FloridaCommerce
Division of Economic Development
The Caldwell Building, MS 80
107 E. Madison Street
Tallahassee, FL 32399

Attention: Steve Weiland

THANK YOU

Incentive Performance

Requirement	Refund	Jobs	Avg. Wage	Taxes
Scheduled	$150,000	75	=>157% of Area Wage	=> Refund
Confirmed	*$150,000*	*214*	*>157% of Area Wage*	*> Refund*

An equal opportunity employer/program. Auxiliary aids and service are available upon request to individuals with disabilities. All voice telephone numbers on this document may be reached by persons using TTY/TTD equipment via the Florida Relay Service at 711.

RESOLUTION NO. 2019-CRA-020

A RESOLUTION OF THE BOARD OF DIRECTORS OF THE DANIA BEACH COMMUNITY REDEVELOPMENT AGENCY ("CRA") OF THE CITY OF DANIA BEACH, FLORIDA, RECOMMENDING PROJECT MAGIC BE APPROVED AS A QUALIFIED TARGET INDUSTRY BUSINESS PURSUANT TO FLORIDA STATUTES, SECTION 288.106; AFFIRMING THE SITE OF THIS PROJECT IS IN A DESIGNATED BROWNFIELD AREA; PROVIDING FOR LOCAL FINANCIAL SUPPORT IN THE FORM OF CASH IN THE AMOUNT OF ONE HUNDRED THIRTY FIVE THOUSAND DOLLARS ($135,000.00) FOR THE QUALIFIED TARGET INDUSTRY TAX REFUND WITH HIGH-IMPACT SECTOR BONUS AS THE CRA'S LOCAL MATCH FOR FISCAL YEARS 2023 THROUGH 2030; REQUESTING A WAIVER OF LOCAL FINANCIAL SUPPORT FOR THE BROWNFIELD BONUS PORTION; PROVIDING FOR SEVERABILITY; PROVIDING FOR CONFLICTS; AND FURTHER, PROVIDING FOR AN EFFECTIVE DATE.

WHEREAS, the corporation referred to as Project Magic, for the purpose of this Resolution, has requested that the Dania Beach Community Redevelopment Agency ("CRA") maintain the confidentiality of its name and business information pursuant to Florida Statutes, Section 288.075; and

WHEREAS, Project Magic, the business under consideration, is a transportation and logistics company considering relocating and expanding its operations into the Community Redevelopment Area of the City of Dania Beach, Florida to include its corporate headquarters and operations facility at Dania Pointe, which is a 102-acre mixed-use development site; and

WHEREAS, Project Magic has been identified as a Qualified Target Industry Business and, moreover, falls within one of the high-impact sectors designated under Section 288.108, Florida Statutes, and is eligible to apply for the Qualified Target Industry Tax Refund with a High-Impact Sector Bonus, pursuant to Florida Statutes, Section 288.106; and

WHEREAS, Project Magic intends to locate in the Dania Beach Community Redevelopment Area at Dania Pointe, which is a 102-acre mixed-use development site between Interstate 95 to the west, Bryan Road to the east and Stirling Road to the south; and

WHEREAS, this site is in a Designated Brownfield Area within the City of Dania Beach, specifically known as the Dania Beach Brownfield Area ID BF060801000; and

WHEREAS, as a result of this location, Project Magic is eligible to apply for the Qualified Target Industry Tax Refund with a Brownfield Bonus; pursuant to Section 288.107, Florida Statutes; and

WHEREAS, Project Magic, as the Applicant, is eligible for the local financial support exemption option of the Brownfield Redevelopment Bonus Refund Program authorized under Section 288.106, Florida Statutes, and desires to exercise that option; and

WHEREAS, the Board of Directors of the Dania Beach Community Redevelopment Agency hereby acknowledges that local financial support of ten percent (10%) of the total tax refund is required under the provisions of Florida Statutes, Section 288.106, governing the State's Qualified Target Industry Tax Refund Program and will contribute local financial support in the form of cash for the Qualified Targeted Industry Tax Refund with High-Impact Sector Bonus;

NOW, THEREFORE, BE IT RESOLVED BY THE BOARD OF DIRECTORS OF THE COMMUNITY REDEVELOPMENT AGENCY OF THE CITY OF DANIA BEACH, FLORIDA:

Section 1. That the foregoing "Whereas" clauses are ratified and confirmed to be true and correct and they are made a part of and are incorporated into this Resolution by reference.

Section 2. That the CRA Board recommends Project Magic to be approved as a Qualified Target Industry Business and a High-Impact Sector Business, both pursuant to Florida Statutes, Section 288.108.

Section 3. That the Dania Beach Community Redevelopment Agency requests a waiver of the local financial support required for the Brownfield Bonus, as authorized under the Qualified Target Industry Refund Program, pursuant to Florida Statutes, Section 288.106(2)(l).

Section 4. That the CRA Board recommends and approves the necessary commitment of local financial support for Project Magic as a Qualified Target Industry Business under the Qualified Target Industry Tax Refund Program and the High-Impact Sector Tax Refund Bonus Program in the total amount of One Hundred Thirty Five Thousand Dollars ($135,000.00), for fiscal years 2023 through 2030, per the attached Exhibit "A" which is incorporated and made a part of this Resolution by this reference, subject to the condition that Broward County commit for the same period to provide a match of local financial support for a

Qualified Target Industry in the amount of One Hundred Thirty Five Thousand Dollars ($135,000.00).

Section 5. The CRA's commitment for local financial support will be made available in accordance with the guidelines set forth by the Florida Department of Economic Opportunity with the stipulation that these funds are intended to represent local financial support pursuant to Section 288.106, Florida Statutes.

Section 6. In furtherance of Project Magic's request for approval, the CRA Board has determined that the basis of this proposed project's private sector wage commitment calculation is one hundred fifty percent (150%) of the Broward County average annual wage.

Section 7. That all resolutions or parts of resolutions in conflict with this Resolution shall be repealed to the extent of such conflict.

Section 8. That this Resolution shall be in full force and take effect immediately upon passage and adoption.

PASSED and ADOPTED on September 10, 2019.

ATTEST:

Thomas Schneider

THOMAS SCHNEIDER, CMC
CRA CLERK

LORI LEWELLEN
CHAIR

APPROVED AS TO FORM AND CORRECTNESS:

for THOMAS J. ANSBRO
CRA ATTORNEY
For R. Gougelman

DANIA BEACH
COMMUNITY REDEVELOPMENT AGENCY

QTI Payout Schedule Project Magic

Input	
Calculation	

Number of Jobs	225
QTI Award Amount	$ 6,000
Total QTI Refund	$1,350,000

	12/31/2022	12/31/2023	12/31/2024	12/31/2025	12/31/2026	12/31/2027	12/31/2028	12/31/2029	12/31/2030	Total
Jobs	25	50	50	50	50	-	-	-	-	225

	12/31/2022	12/31/2023	12/31/2024	12/31/2025	12/31/2026	12/31/2027	12/31/2028	12/31/2029	12/31/2030	Total
Phase I		$ 37,500	$ 37,500	$ 37,500	$ 37,500					$ 150,000
Phase II			$ 75,000	$ 75,000	$ 75,000	$ 75,000				$ 300,000
Phase III				$ 75,000	$ 75,000	$ 75,000	$ 75,000			$ 300,000
Phase IV					$ 75,000	$ 75,000	$ 75,000	$ 75,000		$ 300,000
Phase V						$ 75,000	$ 75,000	$ 75,000	$ 75,000	$ 300,000
Total Refund Payment	**$ -**	**$ 37,500**	**$ 112,500**	**$ 187,500**	**$ 262,500**	**$ 300,000**	**$ 225,000**	**$ 150,000**	**$ 75,000**	**$ 1,350,000**
State Contribution (80%)	$ -	$ 30,000	$ 90,000	$ 150,000	$ 210,000	$ 240,000	$ 180,000	$ 120,000	$ 60,000	$ 1,080,000
Local Contribution (20%)		$ 7,500	$ 22,500	$ 37,500	$ 52,500	$ 60,000	$ 45,000	$ 30,000	$ 15,000	$ 270,000
Local Contribution (10%)		$ 3,750	$ 11,250	$ 18,750	$ 26,250	$ 30,000	$ 22,500	$ 15,000	$ 7,500	$ 135,000

Note: Refund payments are offset from the job creation by one year because the refund payment is made to the company after July 1 (the beginning of the state's fiscal year), the year following the job creation. For example, for jobs created 12/31/15, the refund payment would be made in July 2016.

Minimum Program Requirements (288,106, Florida Statutes)		
Criterias	**Met**	**Unmet**
Proposed annual average wage is at least 115% of local area or Statewide wage	X	
Creation of at least ten (10) jobs	X	
Expansion of a least ten percent (10%) net increase in jobs	X	
Targeted industry as approved by the legislature	X	

Project Characteristics and Waivers (288,106, Florida Statutes)			
Criterias		**Yes**	**No**
150% Average Wage Bonus	$4,000 per job	X	
200% Average Wage Bonus			
High Impact Sector Bonus (HQ)	$2,000 per job	X	
Port Bonus			
Local Financial Support Bonus			
Brownfield Area		X	
Enterprise Area			
Rural County			
Average Wage Waiver Requested			
Local Financial Support Waiver Requested			
Ad Valorem Tax Abatement OR Land Discount Used as Match			

Florida Department of Economic Opportunity

Project Company: Spirit Airlines
DEO Project #: 19-12384
Total New Jobs: 225
Min Avg Wage: $78,854

Programs / Incentive per Net New Job:	Incentive	Funding Sources: Dania Beach	Broward Cnty	Florida
Qualified Target Induatry (QTI)	$4,000	10%	10%	80%
High Impact Perf Incentive (HIPI)	$2,000	10%	10%	80%
Brownfield	$2,000	0%	0%	100%

All incentives are paid retroactively after the required performance has been verified, at 25% per year if the achievement is maintained over the 4 year span.

New jobs created above the contract schedule are not subject to the incentive.

Fiscal	Net New Jobs Scheduled			Scheduled Incentive			Funding Sources			Brownfield	Funding	Tot Scheduled
Year	Annual	Cum	Actual	QTI	HIPI	QTI + HIPI	Dania Beach	Broward Cnty	Florida	Incentive	Florida	Incentive
2023-2024	25	25		$25,000	$12,500	$37,500	$3,750	$3,750	$30,000	$12,500	$12,500	$50,000
2024-2025	50	75		$75,000	$37,500	$112,500	$11,250	$11,250	$90,000	$37,500	$37,500	$150,000
2025-2026	50	125		$125,000	$62,500	$187,500	$18,750	$18,750	$150,000	$62,500	$62,500	$250,000
2026-2027	50	175		$175,000	$87,500	$262,500	$26,250	$26,250	$210,000	$87,500	$87,500	$350,000
2027-2028	50	225		$200,000	$100,000	$300,000	$30,000	$30,000	$240,000	$100,000	$100,000	$400,000
2028-2029		225		$150,000	$75,000	$225,000	$22,500	$22,500	$180,000	$75,000	$75,000	$300,000
2029-2030		225		$100,000	$50,000	$150,000	$15,000	$15,000	$120,000	$50,000	$50,000	$200,000
2030-2031		225		$50,000	$25,000	$75,000	$7,500	$7,500	$60,000	$25,000	$25,000	$100,000
Totals	225		0	$900,000	$450,000	$1,350,000	$135,000	$135,000	$1,080,000	$450,000	$450,000	$1,800,000

DANIA BEACH PATCH

PEOPLE'S ACCESS TO COMMUNITY HORTICULTURE

HOLIDAYS AROUND THE WORLD

DECEMBER 14
9AM – 12PM

Dania Beach PATCH, Love Our Nation, and The Fruitful Field Celebrate Christmas, Hanukkah and Kwanza with Arts & Crafts from 10-11:30AM!

Unique Holiday Gifts!!
Herb Wreaths, Bath Salts with Fresh Garden Herbs, Pinecone Bird Feeders and much more!

If there is a holiday celebration that you'd like to share, please contact us:
Info@thepatchgarden.com

1201 W. Dania Beach Blvd
Dania Beach, Florida
954.993.6401

DANIA BEACH COMMUNITY REDEVELOPMENT AGENCY

LOVE our nation

The FruitfulField GROW GATHER GIVE

LOVE our nation

PATCH
People's Access To Community Horticulture

VETERANS DAY

SATURDAY, NOVEMBER 9, 2024

9:00 am -Noon Plant Sale
9:30-Noon Patriotic Chalk Art
10:00 Veterans Tribute by Love Our Nation students
10:30 Plant Presentation to Veterans
10:30 Patriotic Sing a Long

HONORING ALL WHO SERVED

GARDEN TOURS,
CIDER & DONUTS

1201 W. Dania Beach Blvd., Dania Beach, FL

www.thepatchgarden.com
info@thepatchgarden.cm

LOVE our nation

PATCH
People's Access To Community Horticulture

Veterans of Dania Beach! We would be honored to have you share your service story with our local students for the Dania Beach Patch's Veterans Day tribute. This is a wonderful opportunity to educate and inspire the younger generation by providing them with firsthand accounts of United States history and the invaluable contributions of our veterans. If you are interested in an interview, please let us know at your earliest convenience. Your stories preserve history and honor the bravery and sacrifices made by those who have served.

We look forward to hearing from you and celebrating your legacy.

If interested, please contact us at 954-993-6401. Kindly leave a message if you want to attend. Let us know by November 2nd if you want to be interviewed. Thank you for your service.

PATCH VETERAN'S DAY CELEBRATION

An inter-generational storytelling event as a Veteran's Day Tribute to the American Legion.

PATCH

People's Access To Community Horticulture

Plant Sale

November 9, 2024

9 am - Noon

1201 W. Dania Beach Blvd.

Dania Beach, FL 33004

Come and shop for garden plants. Join us for tips and tricks to get your vegetables and herbs growing!

EBT/Snap cardholders receive 50% off plants and seeds.

Visit us at www.thepatchgarden.com
email: info@thepatchgarden.com

DANIA BEACH
COMMUNITY REDEVELOPMENT AGENCY

The FruitfulField
GROW GATHER GIVE

DANIA BEACH
PATCH
PEOPLE'S ACCESS TO COMMUNITY HORTICULTURE

FRESH FOOD PROGRAM

DECEMBER 2 - APRIL 14

- Weekly Seasonal Fresh Food Box
- $20.00 Per Box | EBT/SNAP Cardholders: Receive 50% off
- Pick-Up: Tuesday | 4:00-6:00 or Wednesday | 10:30-11:30

**Dania Beach residents are given priority for distribution*

- Sign Up Now:

https://form.jotform.com/242736171089158

Website: thepatchgarden.com

Email: info@thepatchgarden.com

Phone: 954.993.6401

1201 W. Dania Beach Blvd
Dania Beach, Florida 33004

DANIA BEACH COMMUNITY REDEVELOPMENT AGENCY

The FruitfulField

Food Access BUCKS

SNAP

The Fruitful Field

GROW GATHER GIVE

Adult Intern Program

APPLY HERE

- 3 locations
- Apply Today
- Limited Spaces
- Harvest food for your family!
- 6 hours a week
- September through April

QR To application:

Learn how to seed, plant, harvest, and distribute fruits and vegetables. Join our community program and help provide food to those in need. Get moving and enjoy the outdoors! This is a great opportunity to learn or sharpen skills for job searches, meet people, and help those in need. You can also help with data management and social media.

The Fruitful Field is a nonprofit organization dedicated to providing nutrient-dense produce and educational opportunities in food-insecure communities. We are located at 100 NE 44th St. Deerfield Beach, FL 33064

info@thefruitfulfield.org

PATCH

People's Access To Community Horticulture

November 23,2024
9 am - Noon

Shop with us-

FARMER'S MARKET

ONLY 100% LOCAL PRODUCE

What we offer

Garden Tours

Seasonal Produce

Thanksgiving Crafts

Address & phone

1201 W. Dania Beach Blvd
Dania Beach, FL 33004
954 993 6401

More info at

www.thepatchgarden.com
info@thepatchgarden.com

The FruitfulField
GROW GATHER GIVE

Fresh Access BUCKS

DANIA BEACH
COMMUNITY REDEVELOPMENT AGENCY

November 2024

EARTH 2 TABLE ~ READING AND MATH AFTERSCHOOL PROGRAM

Monday	Tuesday	Wednesday	Thursday
4 2:15PM-2:30PM Snack @ PATCH 2:45PM-3:45PM Homewok 4:00PM-5:00PM Mr. Adam Hip Hop 5:15PM -5:30PM Snack G&G	5 NO SCHOOL	6 2:15PM-2:30PM Snack 2:40PM- 3:40PM Homework 4:00PM-5:00PM Ms. Maeva 5:00PM-5:30PM Fun Time 6::00PM-9:00PM Dinner & Martial Arts	7 2:15pm-2:40pm: Snack 2:45PM-3:45PM Ms. Shontal 4:00PM-5:00PM: Homework 5:10PM-5:30PM Snack G&G
11 NO SCHOOL	12 2:15PM-2:30PM Snack @ PATCH 2:35PM-4:00PM Homework 4:05PM-5:00PM Fun Time 5:20PM-5:30PM Snack G&G	13 2:15PM-2:30PM Snack 2:40PM- 3:40PM Homework 4:00PM-5:00PM Ms. Maeva 5:00PM-5:30PM Fun Time 6::00PM-9:00PM Dinner & Martial Arts	14 2:15pm-2:40pm: Snack 2:45pm-3:45PM Homework 4:00PM-5:00PM: Hip Hop Mr. Adam 5:10PM-5:30PM Snack G&G .
18 2:15PM-2:30PM Snack @ PATCH 2:45PM-3:45PM Ms. Shontal 4:00PM-5:00PM Gardening Mr. Keya 5:15PM -5:30PM Snack G&G	19 2:15PM-2:30PM Snack @ PATCH 2:30PM-3:40PM Homework 4:00PM-5:15PM Funtime 5:20PM-5:30PM Snack G&G	20 2:15PM-2:30PM Snack @ Patch 2:40PM- 3:40PM Sun CU 4:00PM- 5:000PM Homework 5:00PM-5:30PM Play 6::00PM-9:00PM Dinner & Martial Arts	21 2:15pm-2:40pm: Snack 2:45pm-3:45PM Homework 4:00PM-5:00PM: Hip Hop Mr. Adam 5:10PM-5:30PM Snack G&G
25 NO SCHOOL	26 NO SCHOOL	27 NO SCHOOL	28 NO SCHOOL

***NOTES:**

Nov. 9, 2024 *Honoring our Veterans 9:00AM-12:00NOON @ Dania Beach PATCH

Activities in Green are done at PATCH

LOVE OUR NATION @ PATCH

PATCH PHOTOS – OCTOBER/NOVEMBER 2024

PATCH PHOTOS – OCTOBER/NOVEMBER 2024

DANIA BEACH
COMMUNITY REDEVELOPMENT AGENCY

DANIA BEACH COMMUNITY REDEVELOPMENT AGENCY
REGULAR MEETING MINUTES
MONDAY, OCTOBER 7, 2024 – 6:00 P.M.

DRAFT

1. Call to Order/Roll Call

Chair Ryan called the meeting to order at 6:03 p.m.

Present:
Chair A. J. Ryan IV
Vice-Chair Lori Lewellen
Board Member Joyce L. Davis
Board Member Tamara James
Board Member Marco A. Salvino, Sr.
Executive Director K. Michael Chen
City Attorney Eve Boutsis
CRA Secretary Erin McClendon

2. Citizen Comments

None.

3. Administrative Reports

Board Member James is absent, Board Members excused Board Member James from being present.

Executive Director Chen presented his administrative report that was provided to the Board in their packets. He touched on the following topics:

- Business Academy Program
- New Hire of Business Manager
- New CRA Website
- The PATCH
    - Raised bed construction
    - Volunteer groups
    - PATCH publicity
    - PATCH programs
    - Fruitful Field programs
    - PATCH ribbon cutting

4. Presentations

There were no presentations.

5. Consent Agenda

5.1 Minutes:
- September 12, 2024 CRA Board Meeting

5.2 Travel Requests: None.

Vice Chair Lewellen made a motion to approve the consent agenda. The motion was seconded by Board Member Davis which carried unanimously on voice vote.

6. Proposals and Bids

There were no proposals on this agenda.

7. Discussion and Possible Action

There were no discussion items on this agenda.

8. Information Items

There were no information items.

9. Board Member Comments

There were no board member comments.

10. Adjournment

Chair Ryan adjourned the meeting at 6:12 p.m.

ATTEST:

COMMUNITY REDEVELOPMENT AGENCY

_____
ERIN MCCLENDON
CRA SECRETARY

_____
ARCHIBALD J. RYAN IV
CHAIR – CRA

DRAFT

City of Dania Beach
Memorandum

DATE: 12/10/2024

TO: Chair and Board Members

FROM: Michael Chen, Executive Director

SUBJECT: Commercial Façade Grant: 24 NE 1 Avenue

Request:
Approval of a Façade Grant application for 24 NE 1 Avenue in an amount of $25,000.00 or 50% of the actual cost as evidenced by paid receipts, whichever is less.

Background:
24 NE 1 Avenue (BCPA 5042 34 04 0050) is owned by Joseph Chehebar, dba 24 DANIA, LLC, a Florida Limited Liability Corporation. The property is a mixed-tenant retail center.
.
The Project: Joseph Chehebar is updating the building with a fresh look to attract community-based tenants and improve the neighborhood environment. The façade improvement project includes the installation of new impact windows and doors. The Owner is also going to paint the building and replace the awnings, but these items are not included in or covered by this Façade Grant Application.

The renovation cost for the windows and doors are estimated to cost from $52,177 (Downy Glass) to $71,250 (Mr. Tiger) (two estimates). The Façade Grant application is seeking $25,000.00, representing our program limit for a 50% match of the estimated project cost. The owner's share of the construction costs will be self-funded.

Attachments: Owner's Façade Grant application
Photos of the existing building
Copies of the construction estimates
BCPA folio sheet and map: 24 NE 1 Avenue
Sun Biz Entity Confirmation

Budgetary Impact
If approved, the $25,000 will be funded from account number 106-52-08-552-31-43 of the FY 2025 CRA Budget.

Recommendation
The CRA requests your approval of the Façade Grant application for 24 NE 1 Avenue in an amount of $25,000.00 or 50% of the actual project cost as evidenced by paid receipts, whichever

is less.

Dania Beach Community Redevelopment Agency
Commercial Property Facade Grant Program
Grant Application

PART 1: PROPERTY INFORMATION / PROJECT FUNDING SOURCES

Property Address: 24 NE 1st Avenue, Dania Beach, FL 33004

Property tax folio: 504234040050 Property is in the CRA: Yes [X] No [ ]

Property is classified as a "Retail" or "Commercial" use under Broward County Property Assessor's use codes: Yes [X] No [ ]

The building at this address has received a City/County-managed financial assistance incentive: Yes [ ] No [X]

Property is within a shopping center: Yes [ ] No [X]

Property is owned or occupied by a tax-exempt organization: Yes [ ] No [X]

Property is occupied by a business defined as "ADULT ENTERTAINMENT" in CHAPTER 2.5 of the City of Dania Beach Code of Ordinances: : Yes [ ] No [ ]

Property Is Owned By: An Individual [ ] A Corporation [ ] A Partnership or LLC [X]

Property Owner (Owner) Name: 24 Dania LLC (Joseph Chehebar, Yackov Suissa)

Applicant is the Owner: Yes [X] No [ ] (proof of ownership required)

Applicant is authorized to make this application: Yes [ ] No [ ] (proof of authorization)

Owner Address: 2990 Griffin Rd, Unit 4, Ft Lauderdale, FL 33312

Owner: Phone: 954-612-7618 Fax: _____ Email: jcholdings18@gmail.com

Owner's business is the primary tenant (+50%) of the Property: Yes [ ] No [X]

If yes, business name: N/A [ ] _____

Date business established: _____ Business is +3 years old: Yes [ ] No [ ]

Maximum CRA Cost Match: 50% [X] 70% [ ]

Total Project Cost: $ 52,177

Sources of Project Funds

Grant Request: $ 25,000 ($25,000 max)

Owner Equity: $ 27,177

Other Funds: $ _____

I hereby attest that the information on this application is accurate to the best of my knowledge.

Property Owner/Applicant 11/1/2024 Date

Dania Beach Community Redevelopment Agency
Commercial Property Facade Grant Program
Grant Application

PART 2: PROJECT SCOPE OF WORK / SUMMARY PROJECT BUDGET

Applicant/Property Owner: Joseph Chehebar dba 24 Dania LLC

Owner's Address: 2990 Griffin Rd, Unit 4, Ft Lauderdale, FL 33312

Owner's: Phone: 954-612-7618 Fax: _____ Email: jcholdings18@gmail.com

Property Address: 24 NE 1st Avenue, Dania Beach, FL 33004

Market-rate costs (labor and materials) paid to third-party licensed contractors that construct the improvements are eligible costs. Grant funds cannot be used for acquiring property. All work must be performed in a first-class workmanlike manner in compliance with regulations of the City of Dania Beach and must meet all applicable codes. Portions of the Project cost not funded by the approved Grant must be funded by the Owner Any improvements undertaken prior to execution of the Grant Agreement, Declaration of Restrictive Covenants, and Promissory Note will be ineligible for reimbursement.

DESCRIBE THE OVERALL PROJECT AND THE OBJECTIVES OF THE PROJECT

It is the responsibility of the Applicant to demonstrate the proposed project is in alignment with the adopted CRA Plans. Provide a comprehensive description of the existing building façade, the Project scope of work, and what the Project will do to change the building's functionality and "curb" appeal. (Add more pages if required.)

To update the building facade to attrach community-based tenants and upgrade the neighborhood.

1. TOTAL PROJECT COST: $ 52,177

2. The total project cost must represent the reasonable, current costs of the Project. An itemized proposal for the work to be performed from a licensed general contractor must be attached. The contractor proposal must reflect your description of the Project,

3. PROJECT FUNDING SOURCES:

The total project funding must meet or exceed the total project cost and demonstrate that the applicant is able to meet their financial obligations as described in the Program.

Grant Request: $ 25,000

Owner Equity: $ 27,177

Other Funds: $ _____

Total Project Funding: $ 52,177

I hereby attest that the information on this application is accurate to the best of my knowledge.

Property Owner/Applicant

11/1/2024
Date

Dania Beach Community Redevelopment Agency

Facade Grant Program

Grant Application

PART 3: LINE-ITEM BUDGET

Property Address: 24 NE 1st Avenue, Dania Beach, FL 33004

Applicant/Property Owner: 24 Dania LLC (Joseph Chehebar)

Owner: Address: 2990 Griffin Rd, Ft Lauderdale, FL 33312 Phone: 954-612-7618

All work must be performed by contractor(s) with a valid Florida Contractor License and must be registered with the City of Dania Beach. Only improvements seen fron the building's street frontage (2 sides if the building is on a corner lot) will be eligible for a grant award. Eligibility of work included in the calculation of a grant award is at the sole discretion of the CRA.

Improvement Description	Line-Item Cost
Architectural/engineering plans	$
Contractor fees	$
Removal of deteriorated or undesirable exterior alterations.	$
Exterior improvement, restoration, or rehabilitation	$
Repair, replacement, or installation of new storefront impact windows	$ 52,177
Repair, replacement, or installation of new exterior doors	$
Repair, replacement, or installation of new awnings.	$
Repair, replacement, or installation of new exterior lighting.	$
Renewal or installation of new landscaping.	$
Exterior painting.	$
Signage	$
Parking Lot Improvements	$
ADA compliance features/modifications	$
Roof repairs	$
Structural stabilization	$
Dumpster enclosure	$
General maintenance items	$
Other Improvements: (describe)	$
Other Improvements: (describe)	$
Other Improvements: (describe)	$
TOTAL PROJECT BUDGET	$ 52,177

I hereby attest I am the Property Owner with authority to encumber the Property and the information on this application is accurate to the best of my knowledge.

Property Owner/Applicant

11/1/2024
Date

COLOR PHOTOS OF EXISTING BUILDING FAÇADE – ALL SIDES

3D Rendering

DOWNEY GLASS

1100 NW 15th Avenue, Pompano Beach, FL, 33069 • 954-972-0026

Dealer Information	Customer Information	Quote Information	
Downey Glass	Joseph Chehebar	Quote Name:	Final Updated Meadowbrook With Installation
1100 NW 15th Ave	24 NE 1st Ave	Quote ID:	Q11309
Pompano Beach FL 33069	Dania FL 33004	Date Created:	September 30, 2024
Ariel Swissa	9546127618	Date Modified:	September 30, 2024
(786) 333-8424	jcholdings18@gmail.com	Expiration Date:	October 30, 2024
ariel@downeyglass.com			

Line:	A	**Series:**	DG-1000 Series			**Location:**	SFE-A
Qty:	1	**Unit:**	$2,186.44	**Install:**	$0.00	**Line:**	$2,186.44

Interior Color	Black
Exterior Color	Black
Glass Type	9/16" Clear (1/4 Clear HS - .090 PVB 1/4 Clear HS)
Tint	Clear
Interlayer	Clear PVB
Screen Type	No Screen
Hardware	Yes
Sill Type	ADA Sill
Swing	No

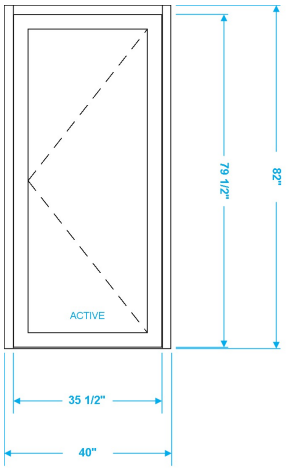

Overall Dimension	40" X 82"
Install	
Square Feet	19.60
Design Pressure	+75 / -75

Notes:

Unit Specifications

	Width	Height	OP	Egress	U-Factor	SHGC	VT
Unit 1: Single Door - 3 1/2" Bottom Rail	35 1/2"	79 1/2"	Left	Yes	0.85	0.78	88.00

Line:	B	**Series:**	DG-1000 Series			**Location:**	SF1
Qty:	1	**Unit:**	$1,485.32	**Install:**	$0.00	**Line:**	$1,485.32

Interior Color	Black
Exterior Color	Black
Glass Type	9/16" Clear (1/4 Clear HS - .0 90 PVB 1/4 Clear HS)
Tint	Clear
Interlayer	Clear PVB
Screen Type	No Screen
Hardware	No
Vertical Mullion	Mullion Type #1

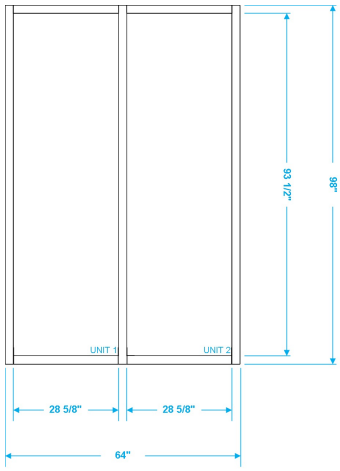

Overall Dimension	64" X 98"
Install	
Square Feet	37.17
Design Pressure	+75 / -75

Notes:

Unit Specifications

	Width	Height	OP	Egress	U-Factor	SHGC	VT
Unit 1: Glazing	28 5/8"	93 1/2"	No	No	0.85	0.78	88.00
Unit 2: Glazing	28 5/8"	93 1/2"	No	No	0.85	0.78	88.00

Line:	C	**Series:**	DG-1000 Series			**Location:**	SF2 & SFE-B
Qty:	1	**Unit:**	$4,408.10	**Install:**	$0.00	**Line:**	$4,408.10

Interior Color	Black
Exterior Color	Black
Glass Type	9/16" Clear (1/4 Clear HS - .090 PVB 1/4 Clear HS)
Tint	Clear
Interlayer	Clear PVB
Screen Type	No Screen
Hardware	Yes
Sill Type	ADA Sill
Vertical Mullion 1	Mullion Type #1
Vertical Mullion 2	Door Mullion

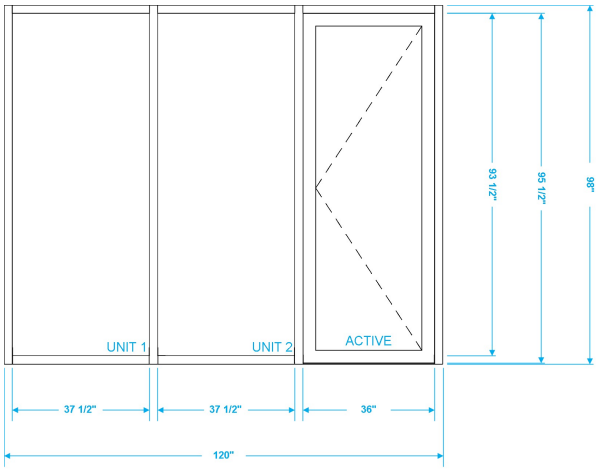

Overall Dimension	120" X 98"
Install	
Square Feet	72.57
Design Pressure	+75 / -75

Notes:

Unit Specifications

	Width	Height	OP	Egress	U-Factor	SHGC	VT
Unit 1: Glazing	37 1/2"	93 1/2"	No	No	0.85	0.78	88.00
Unit 2: Glazing	37 1/2"	93 1/2"	No	No	0.85	0.78	88.00
Unit 3: Single Door - 3 1/2" Bottom Rail	36"	95 1/2"	Left	Yes	0.85	0.78	88.00

Line:	D	**Series:**	DG-1000 Series			**Location:**	SF3
Qty:	1	**Unit:**	$2,681.82	**Install:**	$0.00	**Line:**	$2,681.82

Interior Color	Black
Exterior Color	Black
Glass Type	9/16" Clear (1/4 Clear HS - .0 90 PVB 1/4 Clear HS)
Tint	Clear
Interlayer	Clear PVB
Screen Type	No Screen
Hardware	No
Vertical Mullion	Mullion Type #1

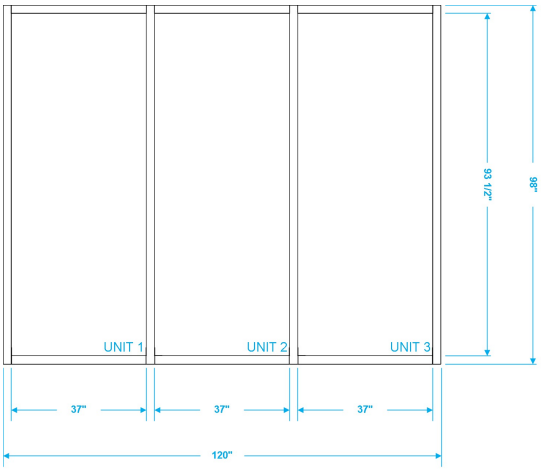

Overall Dimension	120" X 98"
Install	
Square Feet	72.07
Design Pressure	+75 / -75

Notes:

Unit Specifications

	Width	Height	OP	Egress	U-Factor	SHGC	VT
Unit 1: Glazing	37"	93 1/2"	No	No	0.85	0.78	88.00
Unit 2: Glazing	37"	93 1/2"	No	No	0.85	0.78	88.00
Unit 3: Glazing	37"	93 1/2"	No	No	0.85	0.78	88.00

Line:	E	**Series:**	DG-1000 Series			**Location:**	SF4
Qty:	1	**Unit:**	$1,485.32	**Install:**	$0.00	**Line:**	$1,485.32

Interior Color	Black
Exterior Color	Black
Glass Type	9/16" Clear (1/4 Clear HS - .0 90 PVB 1/4 Clear HS)
Tint	Clear
Interlayer	Clear PVB
Screen Type	No Screen
Hardware	No
Vertical Mullion	Mullion Type #1

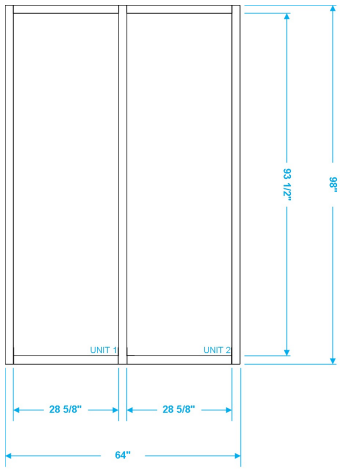

Overall Dimension	64" X 98"
Install	
Square Feet	37.17
Design Pressure	+75 / -75

Notes:

Unit Specifications

	Width	Height	OP	Egress	U-Factor	SHGC	VT
Unit 1: Glazing	28 5/8"	93 1/2"	No	No	0.85	0.78	88.00
Unit 2: Glazing	28 5/8"	93 1/2"	No	No	0.85	0.78	88.00

Line:	F	**Series:**	DG-1000 Series			**Location:**	SFE-C
Qty:	1	**Unit:**	$2,621.07	**Install:**	$0.00	**Line:**	$2,621.07

Interior Color	Black
Exterior Color	Black
Glass Type	9/16" Clear (1/4 Clear HS - .0 90 PVB 1/4 Clear HS)
Tint	Clear
Interlayer	Clear PVB
Screen Type	No Screen
Hardware	Yes
Sill Type	ADA Sill
Swing	No

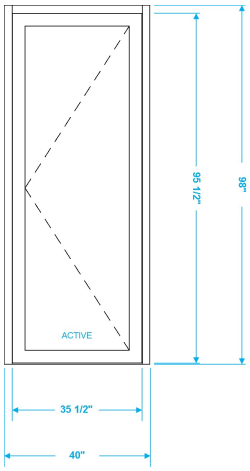

Overall Dimension	40" X 98"
Install	
Square Feet	23.54
Design Pressure	+75 / -75

Notes:

Unit Specifications

	Width	Height	OP	Egress	U-Factor	SHGC	VT
Unit 1: Single Door - 3 1/2" Bottom Rail	35 1/2"	95 1/2"	Left	Yes	0.85	0.78	88.00

Line:	G	**Series:**	DG-1000 Series			**Location:**	SF5
Qty:	1	**Unit:**	$890.87	**Install:**	$0.00	**Line:**	$890.87

Interior Color	Black
Exterior Color	Black
Glass Type	9/16" Clear (1/4 Clear HS - .0 90 PVB 1/4 Clear HS)
Tint	Clear
Interlayer	Clear PVB
Screen Type	No Screen
Hardware	No

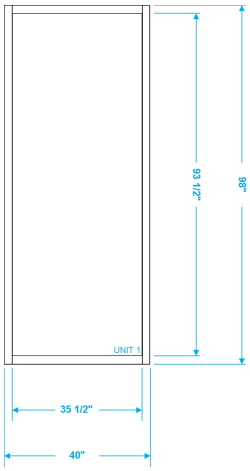

Overall Dimension	40" X 98"
Install	
Square Feet	23.05
Design Pressure	+75 / -75

Notes:

Unit Specifications

	Width	Height	OP	Egress	U-Factor	SHGC	VT
Unit 1: Glazing	35 1/2"	93 1/2"	No	No	0.85	0.78	88.00

Line:	H	**Series:**	DG-1000 Series			**Location:**	SF6
Qty:	1	**Unit:**	$1,447.69	**Install:**	$0.00	**Line:**	$1,447.69

Interior Color	Black
Exterior Color	Black
Glass Type	9/16" Clear (1/4 Clear HS - .0 90 PVB 1/4 Clear HS)
Tint	Clear
Interlayer	Clear PVB
Screen Type	No Screen
Hardware	No
Vertical Mullion	Mullion Type #1

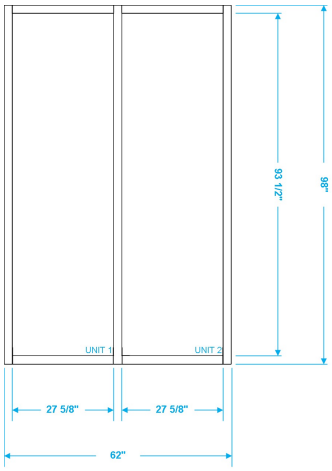

Overall Dimension	62" X 98"
Install	
Square Feet	35.87
Design Pressure	+75 / -75

Notes:

Unit Specifications

	Width	Height	OP	Egress	U-Factor	SHGC	VT
Unit 1: Glazing	27 5/8"	93 1/2"	No	No	0.85	0.78	88.00
Unit 2: Glazing	27 5/8"	93 1/2"	No	No	0.85	0.78	88.00

Line:	I	**Series:**	DG-1000 Series			**Location:**	SFE-D
Qty:	1	**Unit:**	$2,621.07	**Install:**	$0.00	**Line:**	$2,621.07

Interior Color	Black
Exterior Color	Black
Glass Type	9/16" Clear (1/4 Clear HS - .0 90 PVB 1/4 Clear HS)
Tint	Clear
Interlayer	Clear PVB
Screen Type	No Screen
Hardware	Yes
Sill Type	ADA Sill
Swing	No

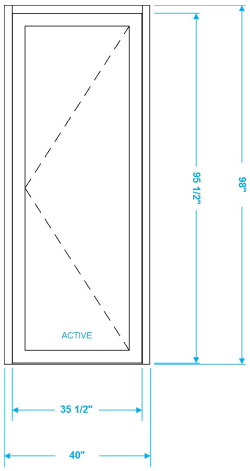

Overall Dimension	40" X 98"
Install	
Square Feet	23.54
Design Pressure	+75 / -75

Notes:

Unit Specifications

	Width	Height	OP	Egress	U-Factor	SHGC	VT
Unit 1: Single Door - 3 1/2" Bottom Rail	35 1/2"	95 1/2"	Left	Yes	0.85	0.78	88.00

Line:	J	**Series:**	DG-1000 Series			**Location:**	SF7
Qty:	1	**Unit:**	$1,635.83	**Install:**	$0.00	**Line:**	$1,635.83

Interior Color	Black
Exterior Color	Black
Glass Type	9/16" Clear (1/4 Clear HS - .0 90 PVB 1/4 Clear HS)
Tint	Clear
Interlayer	Clear PVB
Screen Type	No Screen
Hardware	No
Vertical Mullion	Mullion Type #1

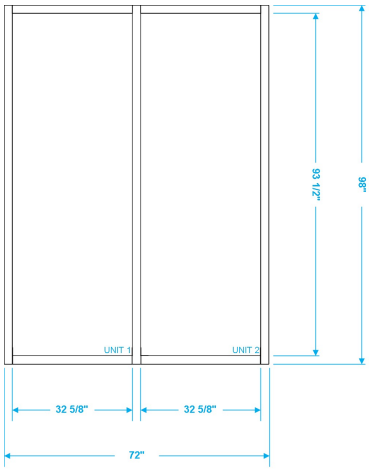

Overall Dimension	72" X 98"
Install	
Square Feet	42.37
Design Pressure	+75 / -75

Notes:

Unit Specifications

	Width	Height	OP	Egress	U-Factor	SHGC	VT
Unit 1: Glazing	32 5/8"	93 1/2"	No	No	0.85	0.78	88.00
Unit 2: Glazing	32 5/8"	93 1/2"	No	No	0.85	0.78	88.00

Line:	K	**Series:**	DG-1000 Series			**Location:**	SF8
Qty:	1	**Unit:**	$1,635.83	**Install:**	$0.00	**Line:**	$1,635.83

Interior Color	Black
Exterior Color	Black
Glass Type	9/16" Clear (1/4 Clear HS - .0 90 PVB 1/4 Clear HS)
Tint	Clear
Interlayer	Clear PVB
Screen Type	No Screen
Hardware	No
Vertical Mullion	Mullion Type #1

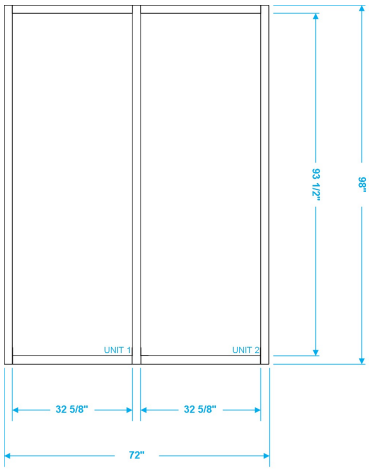

Overall Dimension	72" X 98"
Install	
Square Feet	42.37
Design Pressure	+75 / -75

Notes:

Unit Specifications

	Width	Height	OP	Egress	U-Factor	SHGC	VT
Unit 1: Glazing	32 5/8"	93 1/2"	No	No	0.85	0.78	88.00
Unit 2: Glazing	32 5/8"	93 1/2"	No	No	0.85	0.78	88.00

Line:	L	**Series:**	DG-1000 Series			**Location:**	SFE-E
Qty:	1	**Unit:**	$2,621.07	**Install:**	$0.00	**Line:**	$2,621.07

Interior Color	Black
Exterior Color	Black
Glass Type	9/16" Clear (1/4 Clear HS - .0 90 PVB 1/4 Clear HS)
Tint	Clear
Interlayer	Clear PVB
Screen Type	No Screen
Hardware	Yes
Sill Type	ADA Sill
Swing	No

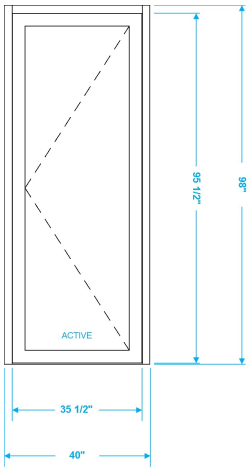

Overall Dimension	40" X 98"
Install	
Square Feet	23.54
Design Pressure	+75 / -75

Notes:

Unit Specifications

	Width	Height	OP	Egress	U-Factor	SHGC	VT
Unit 1: Single Door - 3 1/2" Bottom Rail	35 1/2"	95 1/2"	Left	Yes	0.85	0.78	88.00

Line:	M	**Series:**	DG-1000 Series			**Location:**	SF9
Qty:	1	**Unit:**	$1,635.83	**Install:**	$0.00	**Line:**	$1,635.83

Interior Color	Black
Exterior Color	Black
Glass Type	9/16" Clear (1/4 Clear HS - .0 90 PVB 1/4 Clear HS)
Tint	Clear
Interlayer	Clear PVB
Screen Type	No Screen
Hardware	No
Vertical Mullion	Mullion Type #1

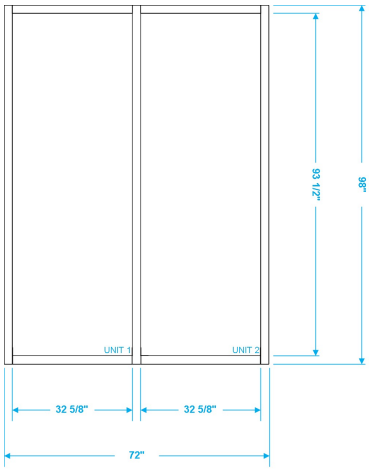

Overall Dimension	72" X 98"
Install	
Square Feet	42.37
Design Pressure	+75 / -75

Notes:

Unit Specifications

	Width	Height	OP	Egress	U-Factor	SHGC	VT
Unit 1: Glazing	32 5/8"	93 1/2"	No	No	0.85	0.78	88.00
Unit 2: Glazing	32 5/8"	93 1/2"	No	No	0.85	0.78	88.00

Line:	N	**Series:**	DG-1000 Series			**Location:**	SF10
Qty:	1	**Unit:**	$890.87	**Install:**	$0.00	**Line:**	$890.87

Interior Color	Black
Exterior Color	Black
Glass Type	9/16" Clear (1/4 Clear HS - .0 90 PVB 1/4 Clear HS)
Tint	Clear
Interlayer	Clear PVB
Screen Type	No Screen
Hardware	No

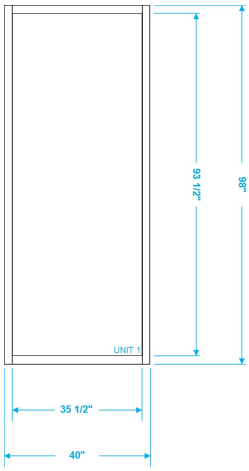

Overall Dimension	40" X 98"
Install	
Square Feet	23.05
Design Pressure	+75 / -75

Notes:

Unit Specifications

	Width	Height	OP	Egress	U-Factor	SHGC	VT
Unit 1: Glazing	35 1/2"	93 1/2"	No	No	0.85	0.78	88.00

Line:	O	**Series:**	DG-1000 Series			**Location:**	SF11
Qty:	1	**Unit:**	$1,485.32	**Install:**	$0.00	**Line:**	$1,485.32

Interior Color	Black
Exterior Color	Black
Glass Type	9/16" Clear (1/4 Clear HS - .0 90 PVB 1/4 Clear HS)
Tint	Clear
Interlayer	Clear PVB
Screen Type	No Screen
Hardware	No
Vertical Mullion	Mullion Type #1

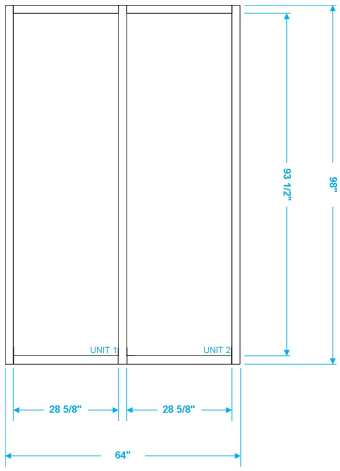

Overall Dimension	64" X 98"
Install	
Square Feet	37.17
Design Pressure	+75 / -75

Notes:

Unit Specifications

	Width	Height	OP	Egress	U-Factor	SHGC	VT
Unit 1: Glazing	28 5/8"	93 1/2"	No	No	0.85	0.78	88.00
Unit 2: Glazing	28 5/8"	93 1/2"	No	No	0.85	0.78	88.00

Line:	P	**Series:**	DG-1000 Series			**Location:**	SFE-F
Qty:	1	**Unit:**	$2,621.07	**Install:**	$0.00	**Line:**	$2,621.07

Interior Color	Black
Exterior Color	Black
Glass Type	9/16" Clear (1/4 Clear HS - .090 PVB 1/4 Clear HS)
Tint	Clear
Interlayer	Clear PVB
Screen Type	No Screen
Hardware	Yes
Sill Type	ADA Sill
Swing	No

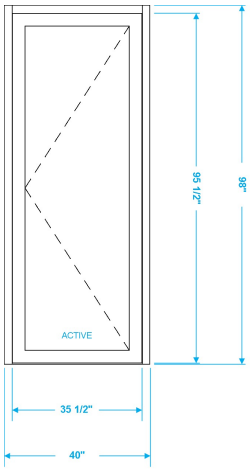

Overall Dimension	40" X 98"
Install	
Square Feet	23.54
Design Pressure	+75 / -75

Notes:

Unit Specifications

	Width	Height	OP	Egress	U-Factor	SHGC	VT
Unit 1: Single Door - 3 1/2" Bottom Rail	35 1/2"	95 1/2"	Left	Yes	0.85	0.78	88.00

Line:	Q	**Series:**	DG-1000 Series			**Location:**	SF12
Qty:	1	**Unit:**	$1,410.06	**Install:**	$0.00	**Line:**	$1,410.06

Interior Color	Black
Exterior Color	Black
Glass Type	9/16" Clear (1/4 Clear HS - .0 90 PVB 1/4 Clear HS)
Tint	Clear
Interlayer	Clear PVB
Screen Type	No Screen
Hardware	No
Vertical Mullion	Mullion Type #1

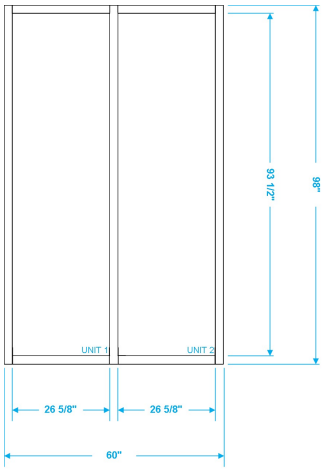

Overall Dimension	60" X 98"
Install	
Square Feet	34.58
Design Pressure	+75 / -75

Notes:

Unit Specifications

	Width	Height	OP	Egress	U-Factor	SHGC	VT
Unit 1: Glazing	26 5/8"	93 1/2"	No	No	0.85	0.78	88.00
Unit 2: Glazing	26 5/8"	93 1/2"	No	No	0.85	0.78	88.00

Line: R
Qty: 1 **Unit:** $15,000.00 **Line:** $15,000.00

Description:
Installation Fee

Sub Total:	$48,763.58
Installation:	$0.00
Sales Tax - 7.00 % :	$3,413.45
Grand Total:	**$52,177.03**

Joseph Chehebar	**Ariel Swissa**
Customer Name	Sales Rep Name
	Ariel Swissa
Customer Signature	Sales Rep Signature
	September 30, 2024
Date	Date

Notes

Weighted Average Energy Values & Project Square Feet

U-Factor: 0.85 SHGC: 0.78 VT: 88 Windows FT²: 0 Doors FT²: 0

Payment Terms

Down Payment:	50%	=	$26,088.52
Balance Due:	50%	=	$26,088.52
Payment Terms:	50% pre payment. 50% at delivery		
Late Payment:			

Disclaimer

Customer agrees and acknowledges that this is a custom made order . This order is Non-cancelable and non-refundable once signed and approved. Balance is due in full once the order is complete.

16899 S. W. 49TH COURT
MIRAMAR, FL. 33027
(954) 553-8012 - (305) 879-3711
FAX: (754) 400-9371

PROPOSAL

To: **JC Holdings 18**
ATTN: Yossi Shehebar

Date: 07/17/24
Proposal #JCH001

Description	Total
This Proposal is for the glass & glazing for **Dania Storefront Project** (24 NE 1st Ave., Dania Beach, FL); including the following:	$71,250.00

• Furnish & Install Fixed Windows, Swing Doors, Horizontal Rollers
  ○ Eco Window Wall 400 – 10 Each – 72″ x 96″
  ○ Eco French Door 600 – 7 Each – 36″ x 96″
  ○ Eco Horizontal Roller Window 200 – 7 Each - 36″ x 52″	

• Gray Tinted Glass – LMI	
• GC to provide necessary substrate per Product Approval – any modifications to be responsibility of GC.	
• Any paint or stucco refinishing is EXCLUDED.	
• Exterior caulking beauty bead	
• Cleaning of windows	
• Application of waterproofing	
• Removal of existing windows to be done by GC – Mr. Tiger to come to finished openings ready for installation.	
• All shop drawings, permitting &/or fees to be handled by GC.	
• Mr. Tiger to coordinate with GC to ensure proper opening sizes.	.
PAYMENT TERMS: 50% required to begin; 25% upon delivery of material on-site; 25% upon completion. **TOTAL:**	$ 71,250.00

Make all checks payable to MR. TIGER CC.

Thank you for your business!

MARTY KIAR BROWARD COUNTY PROPERTY APPRAISER

Site Address	24 NE 1 AVENUE, DANIA BEACH FL 33004	ID #	5042 34 04 0050
Property Owner	24 DANIA LLC	Millage	0413
Mailing Address	2990 GRIFFIN ROAD SUITE 4 FORT LAUDERDALE FL 33312	Use	12-01

Abbr Legal Description	ESKILSON ADD TO DANIA AMENDED PLAT 7-10 B LOT 32,33,34 BLK 2

The just values displayed below were set in compliance with Sec. 193.011, Fla. Stat., and include a reduction for costs of sale and other adjustments required by Sec. 193.011(8).

* 2025 values are considered "working values" and are subject to change.

Property Assessment Values

Year	Land	Building / Improvement	Just / Market Value	Assessed / SOH Value	Tax
2025	$194,780	$547,370	$742,150	$742,150	
2024	$194,780	$547,370	$742,150	$579,810	
2023	$97,390	$429,710	$527,100	$527,100	$13,170.49

2025 Exemptions and Taxable Values by Taxing Authority

	County	School Board	Municipal	Independent
Just Value	$742,150	$742,150	$742,150	$742,150
Portability	0	0	0	0
Assessed/SOH	$742,150	$742,150	$742,150	$742,150
Homestead	0	0	0	0
Add. Homestead	0	0	0	0
Wid/Vet/Dis	0	0	0	0
Senior	0	0	0	0
Exempt Type	0	0	0	0
Taxable	$742,150	$742,150	$742,150	$742,150

Sales History

Date	Type	Price	Book/Page or CIN
4/18/2024	WD-Q	$950,000	119530057
8/1/1990	WD	$140,000	17720 / 473
1/1/1985	CET	$1,000	
7/1/1981	WD	$160,000	
5/1/1964	WD	$38,000	

Land Calculations

Price	Factor	Type
$20.00	9,739	SF
Adj. Bldg. S.F. (Card, Sketch)		4968
Units		2
Eff./Act. Year Built: 1970/1959		

Special Assessments

Fire	Garb	Light	Drain	Impr	Safe	Storm	Clean	Misc
04						DS		
S								
4968						16.6		

24 NE 1st Ave unit 101

Detail by Entity Name

Florida Limited Liability Company
24 DANIA, LLC

Filing Information

Document Number	L24000151255
FEI/EIN Number	NONE
Date Filed	03/28/2024
Effective Date	03/28/2024
State	FL
Status	ACTIVE
Last Event	LC AMENDMENT
Event Date Filed	07/10/2024
Event Effective Date	NONE

Principal Address

2990 GRIFFIN ROAD
SUITE 4
FT. LAUDERDALE, FL 33312

Mailing Address

2990 GRIFFIN ROAD
SUITE 4
FT. LAUDERDALE, FL 33312

Registered Agent Name & Address

CHEHEBAR, JOSEPH
5339 SW 33RD AVENUE
FT. LAUDERDALE, FL 33312

Authorized Person(s) Detail

Name & Address

Title MGR

CHEHEBAR, JOSEPH
5339 SW 33RD AVENUE
FT. LAUDERDALE, FL 33312

Title MGR

CHEHEBAR, YEHOUDA
1640 NW 101 WAY
PLANTATION, FL 33322

Annual Reports

No Annual Reports Filed

Document Images

07/10/2024 -- LC Amendment	View image in PDF format
03/28/2024 -- Florida Limited Liability	View image in PDF format

Florida Department of State, Division of Corporations

RESOLUTION NO. 2024-CRA-___

A RESOLUTION OF THE BOARD OF DIRECTORS OF THE COMMUNITY REDEVELOPMENT AGENCY ("CRA") OF THE CITY OF DANIA BEACH, FLORIDA, AUTHORIZING THE PROPER CRA OFFICIALS TO EXECUTE AN AGREEMENT WITH JOSEPH CHEHEBAR, D/B/A 24 DANIA, LLC, TO PROVIDE A COMMERCIAL FAÇADE GRANT FOR THE PROPERTY LOCATED AT 24 NE 1 AVENUE FOR AN AMOUNT NOT TO EXCEED TWENTY-FIVE THOUSAND DOLLARS ($25,000.00); PROVIDING FOR CONFLICTS; FURTHER, PROVIDING FOR AN EFFECTIVE DATE.

WHEREAS, the Commercial Façade Grant is a business retention program, intended to improve the appearance of properties, encourage economic investment, and enhance business functionality; and

WHEREAS, on October 9, 2024, Joseph Chehebar, dba 24 DANIA, LLC, applied for a Commercial Façade Grant for improvements on the properties located at 24 NE 1 Avenue (BCPA 5042 34 04 0050); and

WHEREAS, the Chehebar application included cost estimates of $52,177 (Downy Glass) and $71,250 (Mr. Tiger) complying with the minimum requisite of two quotes from licensed contractors; and

WHEREAS, the Chehebar application was deemed to be a complete and valid Commercial Façade Grant application.:

NOW, THEREFORE, BE IT RESOLVED BY THE BOARD OF DIRECTORS OF THE COMMUNITY REDEVELOPMENT AGENCY OF THE CITY OF DANIA BEACH, FLORIDA:

Section 1. The above "WHEREAS" clauses are ratified and confirmed, and they are made a part of and incorporated into this Resolution by this reference.

Section 2. The CRA Board approves the Façade Grant application for the property located at 24 NE 1 Avenue (BCPA 5042 34 04 0050) in an amount of $25,000.00 or 50% of the actual project cost as evidenced by paid receipts, whichever is less.

Section 3. The grant commitment does not become binding until the Agreement and Note are executed and the Restrictive Covenants are recorded.

Section 4. All resolutions or parts of resolutions in conflict with this Resolution are repealed to the extent of such conflict.

Section 5. This Resolution shall be in force and take effect in ten (10) days after its passage and adoption.

PASSED AND ADOPTED on December 10, 2024.

Motion by _____, second by _____

FINAL VOTE ON ADOPTION:

Board Member Lori Lewellen _____

Board Member Luis Rimoli _____

Board Member Archibald J. Ryan IV _____

Vice Chair Marco Salvino _____

Chair Joyce L. Davis _____

ATTEST:

_____
ELORA RIERA, MMC
CRA CLERK

_____
JOYCE L. DAVIS
CRA BOARD CHAIR

APPROVED AS TO FORM AND CORRECTNESS:

_____
EVE A. BOUTSIS
CRA ATTORNEY

City of Dania Beach
Memorandum

DATE: 12/10/2024

TO: Chair and Board Members

FROM: Michael Chen, Executive Director

SUBJECT: Potential Disposition of a CRA-Owned Land Parcel - 137 NW 4th Ave

---

Request:
Florida Statutes 163.380 requires a published notice of the CRA's interest in selling a CRA-owned property prior to disposition of any real property or interest therein. It is requested the Board authorize the CRA to publish such public notice and initiate an RFP process for the CRA-owned site at 137 NW 4th Avenue. The Site encompasses 5,421sf (0.124 acres).

Background:
Interested Party: On October 17, 2024, the CRA received a letter from Love Our Nation (LON) expressing an interest in developing children's center on the CRA-owned property at 137 NW 4th Avenue (BCPA ID# 5042 34 01 1190).

Love Our Nation is a nonprofit 501c3, established in the State of Florida in 2013. Their mission is to educate and empower youth with life skills that will enable them to be healthy and productive contributors in creating a more prosperous and loving community. The key initiatives of LON are focused on the areas of Health, Education and Preservation of the Environment.

Love Our Nation has served the Dania Beach Community since 2015. This began with the Earth 2 Table gardening program at C. W. Thomas Community Center and The Dania Beach PATCH; and then expanded to an after school safe zone resource to support children with homework assistance (through the help of volunteer tutors), health and nutrition (in partnership with FLIPANY and Loafing Around), dance classes and wellness (in partnership with Developing Dream Foundation), and financial literacy (in partnership with SUN Credit Union), golf classes (with 1st Tee of Broward).

Attachments: Love Our Nation letter of interest
BCPA Folio No. 5042 34 01 1190

Budgetary Impact
Love Our Nation is seeking a below-market sale or long-term lease of the land, without additional financial support, to build the children's center.

Recommendation
Request to publish notice

`October 17, 2024

Dear Mr. Chen,

I've identified a property, (137 NW 4th Ave, Dania Beach, FL 33004 Folio# 5042 34 01 1190) that is owed by CRA and I'd like to discuss with CRA how this site can be used to support the children in Love Our Nation and neighborhood programs. In the past 2 (two) years, For the Love Of Our Nation Corp., DBA Love Our Nation (a nonprofit 501c3 Florida Corporation) has developed an ever increasing relationship with the PATCH.

Love Our Nation has been working with the beautiful youth and their families of Dania Beach, specifically the CW Thomas corridor since 2015. We have a free afterschool program that follows the Broward County School calendar Monday thru Thursday, 2:00PM-5:30PM (Fridays optional swimming). This program provides life skills to our beautiful youth by offering daily healthy snacks at the beginning and end of the program, Homework help, Tutoring, Therapy, Financial literacy, Cultural programs, Quarterly Senior Fresh Fruit & Veggie Bicycle Distribution, The Arts (music, dancing, acting etc.,), Martial Arts, Golf, Summer BreakSpot (free healthy hot dinner), Gardening, and Composting held at the PATCH.

We are aware of the daily emotional, economical, and financial challenges that face our youth and their families. With the knowledge gained through our consistent engagement, we have and continue to be a dedicated part of the solution that will enable our youth to break the cycle of poverty and despair to become productive adults in Dania Beach and Beyond.

In conclusion, Love Our Nation humbly asks for your guidance towards the next steps regarding this land, while we continue to pursue enhancing the lives of the youth and their families.

Thank you for your time, attention, consideration, and I eagerly await your response.

Respectfully,

Ovrill Dwyer
Exec-Director

618 N. 24th Ave., Hollywood, FL 33020 www.loveournation.org 305 756 0550

MARTY KIAR
BROWARD COUNTY
PROPERTY APPRAISER

Site Address	137 NW 4 AVENUE #1-3, DANIA BEACH FL 33004	ID #	5042 34 01 1190
Property Owner	CITY OF DANIA BEACH COMMUNITY REDEVELOPMENT AGENCY	Millage	0413
Mailing Address	100 W DANIA BEACH BLVD DANIA BEACH FL 33004-3643	Use	80

Abbr Legal Description	TOWN OF MODELO (DANIA) B-49 D LOT 5 BLK 8

The just values displayed below were set in compliance with Sec. 193.011, Fla. Stat., and include a reduction for costs of sale and other adjustments required by Sec. 193.011(8).

* 2021 values are considered "working values" and are subject to change.

Property Assessment Values

Year	Land	Building / Improvement	Just / Market Value	Assessed / SOH Value	Tax
2021*	$40,660		$40,660	$35,780	
2020	$32,530		$32,530	$32,530	$96.00
2019	$32,530		$32,530	$23,840	$96.00

2021* Exemptions and Taxable Values by Taxing Authority

	County	School Board	Municipal	Independent
Just Value	$40,660	$40,660	$40,660	$40,660
Portability	0	0	0	0
Assessed/SOH	$35,780	$40,660	$35,780	$35,780
Homestead	0	0	0	0
Add. Homestead	0	0	0	0
Wid/Vet/Dis	0	0	0	0
Senior	0	0	0	0
Exempt Type 15	$35,780	$40,660	$35,780	$35,780
Taxable	0	0	0	0

Sales History

Date	Type	Price	Book/Page or CIN
7/15/2019	QCD-T	$100	115961637
2/1/2013	QCD-T	$100	111333011
9/21/2011	TXD-D	$15,600	48251 / 1307
9/13/2011	CET-D	$1,100	48214 / 1758
4/26/2002	WD*	$96,000	33223 / 1009

* Denotes Multi-Parcel Sale (See Deed)

Land Calculations

Price	Factor	Type
$7.50	5,421	SF
Adj. Bldg. S.F.		

Special Assessments

Fire	Garb	Light	Drain	Impr	Safe	Storm	Clean	Misc
04	V					DS		
L								
1						2.4		

Property Id: 504234011190 **Please see map disclaimer

May 20, 2021

1:600

0 25 50 100 ft

0 5 10 20 m

Flight Date : Dec 18, 2020 thru Jan 9, 2021 Broward County Property Appraiser

CITY OF DANIA BEACH
CRA MEETING DATES
JANUARY 2025 – DECEMBER 2025

CRA Meeting Date **2nd Tuesdays – 6:00 p.m.**	****Holidays and/or Events****
January 14, 2025	
February 11, 2025	
March 11, 2025	
April 8, 2025	
May 13, 2025	
June 10, 2025	
July 8, 2025	
~~August 12, 2025~~	**Commission Summer Break**
September 9, 2025	
October 14, 2025	
November 18, 2025	
December 9, 2025	

DRAFT